LEGEND

1. Leaf
2. Solid wood
3. Wooden stop-glass
4. Glass
5. Thermo-expansive seal

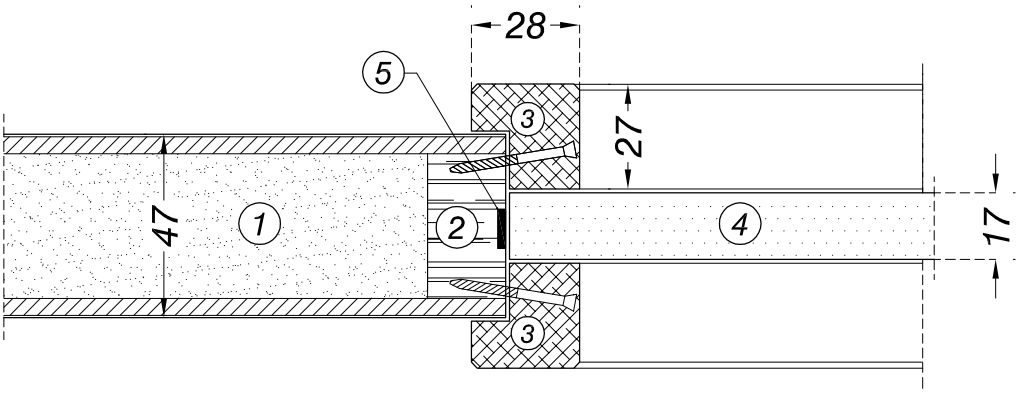

EI 30

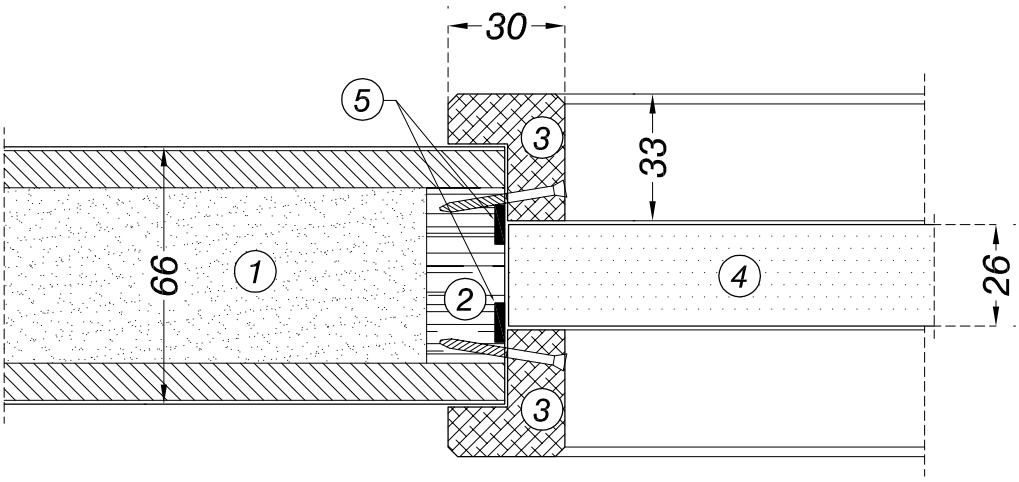

EI 60

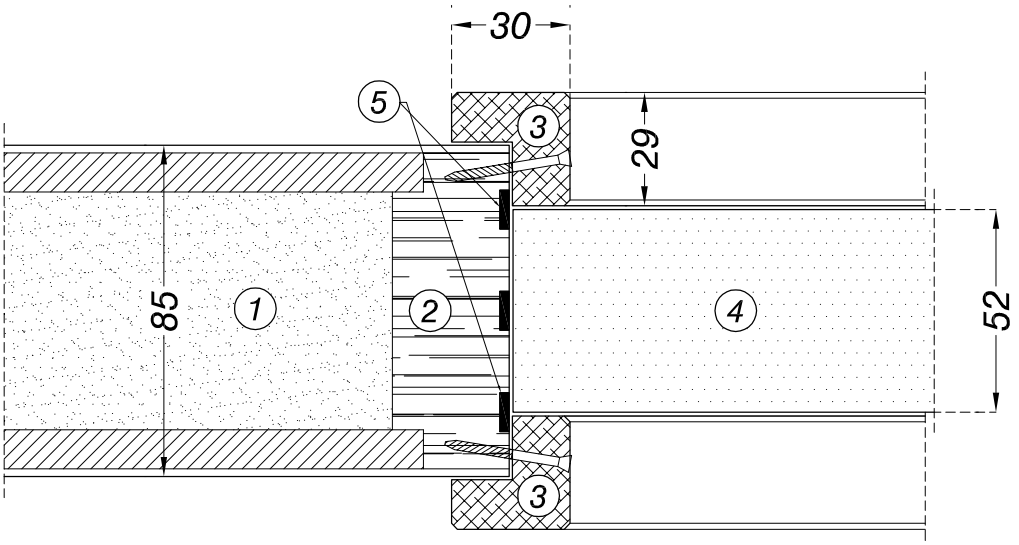

EI 120

D2

SEPTEMBER 2009

GLASS-STOP

LEAF-GLASS DETAIL

SEBINO CHIUSURE

SEBINO CHIUSURE Srl
I - 24020 Scanzorosciate (BG)
Via XXV Aprile, 21
Tel. 035.24.27.10
Fax 035.24.47.37
www.sebinochiusure.it
Info@sebinochiusure.it